STOP!

BEFORE TRYING TO USE YOUR TURNTABLE PLEASE FOLLOW THESE STEPS TO CONFIGURE IT PROPERLY.

1. ATTACHING THE BELT

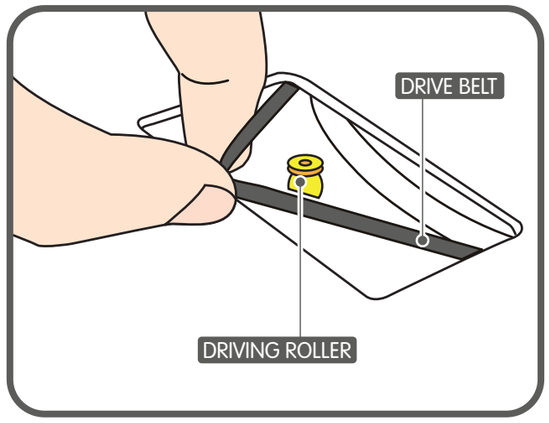

If you have a direct drive turntable please proceed to step 2. Otherwise start here.

1. Remove the platter from its protective wrapping and place on the spindle of the main unit.
2. Loop the belt over the motor pulley. Be sure it does not twist.
3. Remove the slipmat from its protective wrapping and place on the platter.
4. Place the counter-weight on the back of the tonearm assembly.
5. If desired, place the 45rpm adaptor in its allocated holder on the main unit.

2. TONE ARM INSTALLATION

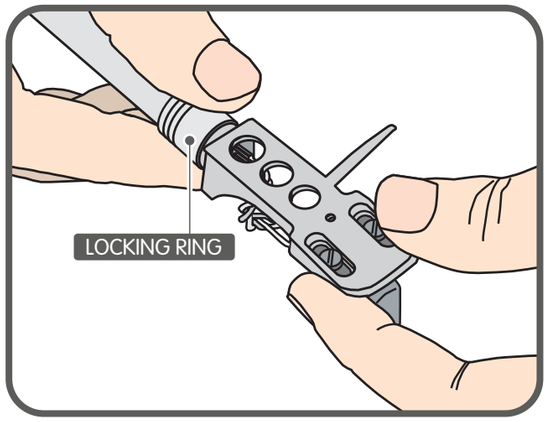

The major cause of problems in sound and skipping on the vinyl is the lack of proper set up of the needle and turntable adjustments. The needle is designed to operate at a specific angle to the vinyl. Your turntable has two adjustments to correctly position the needle to the vinyl.

The first adjustment is the installation of the cartridge-head-shell assembly into the tone arm tube lock. Your turntable includes a Stanton 500 V3 cartridge pre-mounted to the headshell. Holding the one arm tube in one hand, insert the cartridge-headshell into the tube lock with the other hand. Turn the locking ring clockwise (when viewed from the rear) until the headshell is locked tightly into the tone arm. Remove the needle protector from the cartridge and place the needle on record. View the needle from the front and insure that the needle is perpendicular to the record surface. If some adjustment is needed, simply loosen the locking ring and rotate the cartridge headshell until the needle is perpendicular to the record surface. Then re-tighten the locking ring.

3. ADJUSTING STYLUS PRESSURE

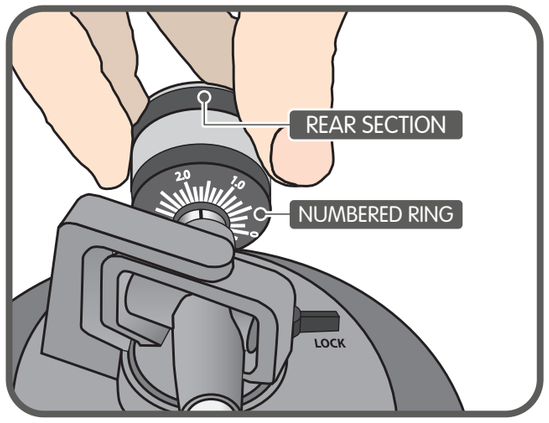

The second adjustment is the needle(or stylus) pressure. Start with the cartridge-headshell assembly mounted into the tone arm. Remove any needle protectors provided. With tone arm free, adjust the tone arm counterweight by rotating the rear section until the tone arm floats in a balanced condition above the record or mat.
Do not allow the needle to drop onto the mat or the turntable platter during this adjustment. You might damage the needle tip. Now, carefully hold the tone arm in one hand while rotating the numbered ring on the front of the counter-weight with the other hand to the "0" setting. Next, without touching the numbered ring, Rotate the rear counterweight until the desired needle pressure reading is next to the line on top of the tone arm tube. The recommended stylus pressure for the Stanton 500 V3 cartridge is between two and five grams.

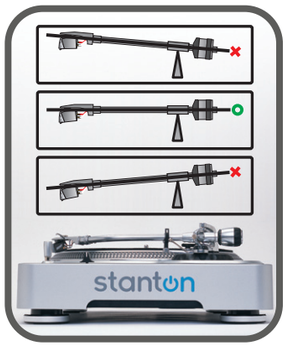

If you bought a turntable that has an anti-skate control, please go to step 4.

4. ADJUSTING ANTI-SKATE

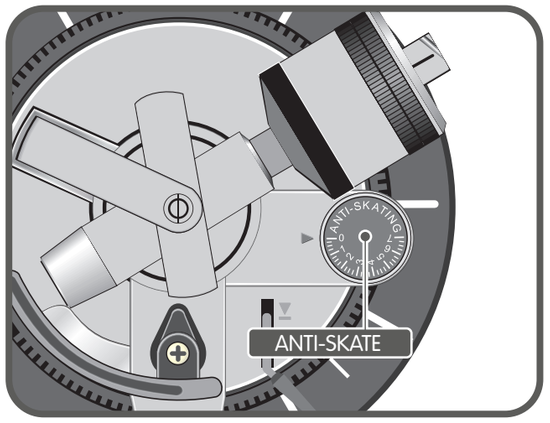

If you are using the turntable / cartridge for playback purposes you will need to set anti-skating. Anti-skating helps keep the needle centered in groove during standard playback. However anti-skate will actually cause the needle to skip if used while scratching or back cueing.

To set anti-skating for playback simply turn the anti-skate dial to the same number setting as the stylus pressure reading (ex: 1 gram of stylus pressure = 1 gram anti-skate). If you are using a straight-arm turntable or scratching leave the anti-skating to "0".